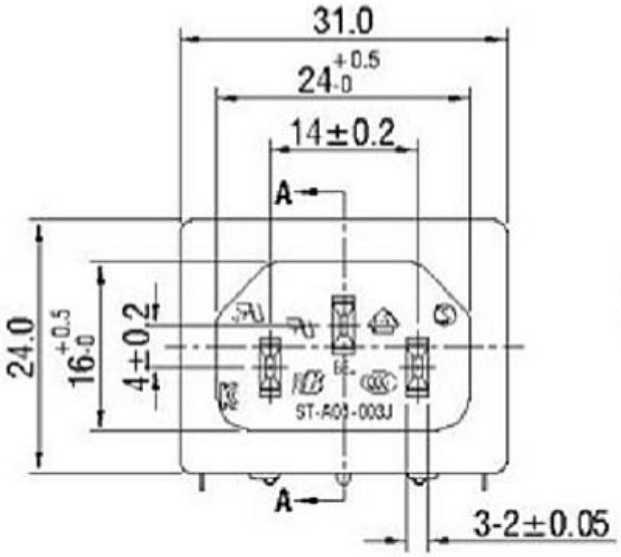

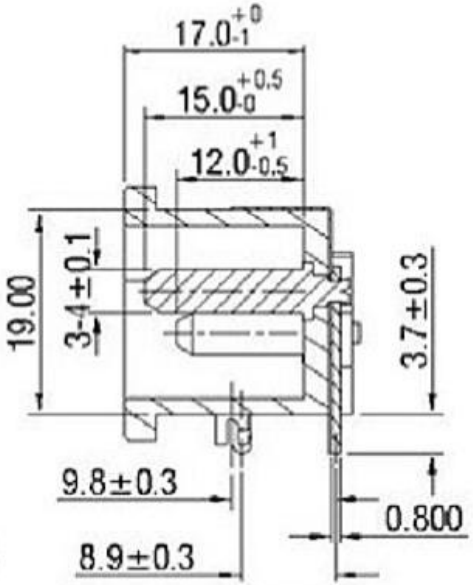

SECTION A-A

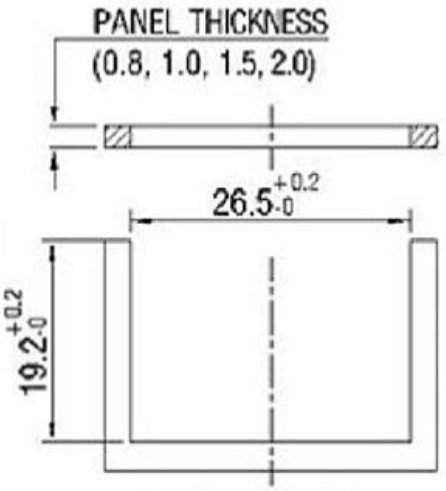

PANEL CUT-OUT

SPEC:

A. Material:
1. Housing: PA66
2. Terminal: COPPER ALLOY, TIN PLATED

B.Electrical Characteristics:
1.Rating: 15A 250V~ (UL,CUL)
10A 250V~(CCC,VDE,SEMKO)
2.Electric Strength: AC 2,000 V FOR ONE MINUTE
3.Insulation Resistance: 100MΩ MIN, AT 500V DC

C.Approvals:
UL, CUL, CCC, VDE, SEMKO,KC

PART NO.:	DIM. X
ST-A01-003JET-33+M05(0.8HP)	0.8
ST-A01-003JET-33+M05(1.0HP)	1.0
ST-A01-003JET-33+M05(1.5HP)	1.5
ST-A01-003JET-33+M05(2.0HP)	2.0

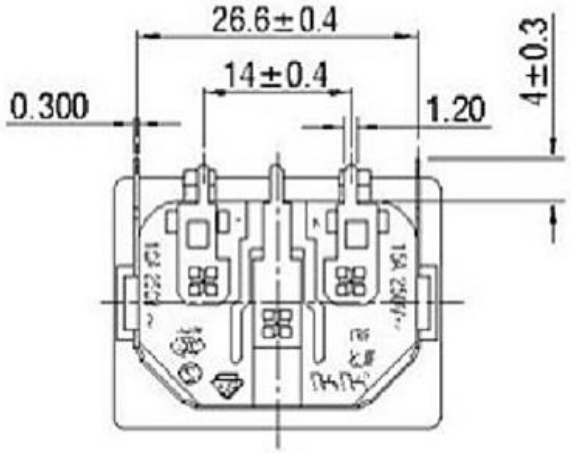

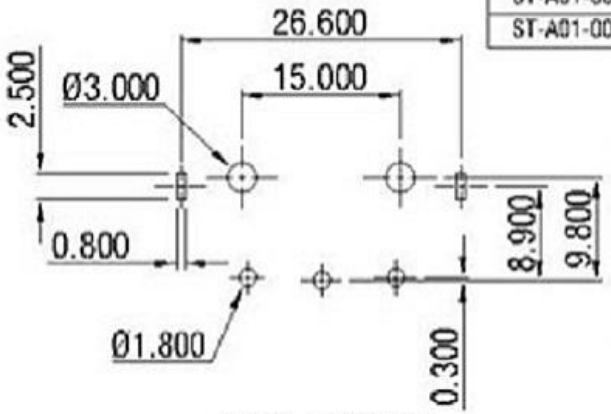

PCB LAYOUT

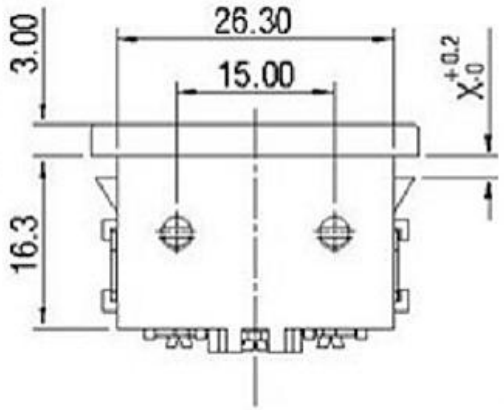

REV.	DATE	REVISION DESCRIPTION	ISSUE

普通公差
COMMON TOLERANCE :

UP TO 5	±0.20
ABOVE 5 TO 30	±0.30
ABOVE 30	±0.50
ANGULAR	±5°

东莞市高迪电子有限公司

单位 UNIT	mm	投影 PROJECTED		品名 PRODUCT NAME	AC POWER JACK
绘图 DRAWN BY	林晓良	核对 CHECKED BY		型号 MODEL NO.	
日期 DATE	19. 08. 12	核准 APPROVAL BY		料号 PART NO.	KD-AC电源插座